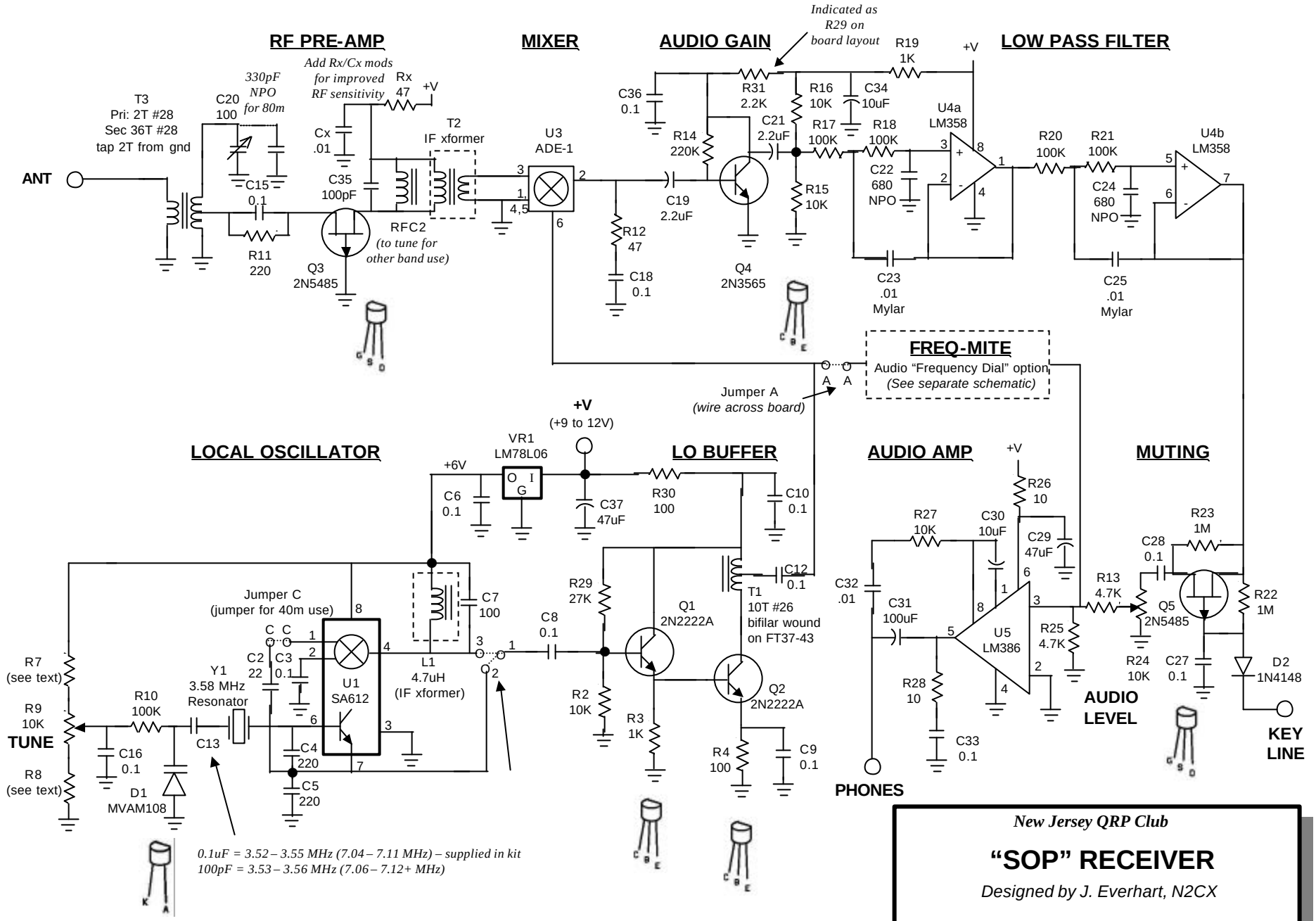
RF PRE-AMP
MIXER
AUDIO GAIN
LOW PASS FILTER
Indicated as R29 on board layout
Add Rx/Cx mods for improved RF sensitivity
330pF NPO for 80m
T3
Pri: 2T #28
Sec 36T #28
tap 2T from gnd
ANT
C20 100
C15 0.1
R11 220
Cx .01
C35 100pF
Rx 47
+V
T2 IF xformer
RFC2 (to tune for other band use)
Q3 2N5485
U3 ADE-1
R12 47
C18 0.1
C36 0.1
R14 220K
C19 2.2uF
R31 2.2K
C21 2.2uF
Q4 2N3565
R16 10K
R17 100K
R15 10K
C34 10uF
R18 100K
C22 680 NPO
C23 .01 Mylar
U4a LM358
R19 1K
R20 100K
R21 100K
C24 680 NPO
C25 .01 Mylar
U4b LM358
FREQ-MITE
Audio "Frequency Dial" option
(See separate schematic)
Jumper A
(wire across board)
LOCAL OSCILLATOR
LO BUFFER
AUDIO AMP
MUTING
+V
(+9 to 12V)
VR1 LM78L06
+6V
C6 0.1
C37 47uF
R30 100
C10 0.1
C12 0.1
T1
10T #26
bifilar wound
on FT37-43
Jumper C
(jumper for 40m use)
C7 100
L1 4.7uH (IF xformer)
U1 SA612
C2 22
C3 0.1
C4 220
C5 220
Y1 3.58 MHz Resonator
C13
R10 100K
C16 0.1
D1 MVAM108
R7 (see text)
R9 10K
TUNE
R8 (see text)
C8 0.1
R29 27K
Q1 2N2222A
R2 10K
R3 1K
Q2 2N2222A
R4 100
C9 0.1
R26 10
R27 10K
C30 10uF
C29 47uF
C32 .01
C31 100uF
U5 LM386
R25 4.7K
R28 10
C33 0.1
PHONES
R13 4.7K
R23 1M
C28 0.1
Q5 2N5485
R22 1M
R24 10K
C27 0.1
D2 1N4148
AUDIO LEVEL
KEY LINE
0.1uF = 3.52 – 3.55 MHz (7.04 – 7.11 MHz) – supplied in kit
100pF = 3.53 – 3.56 MHz (7.06 – 7.12+ MHz)
New Jersey QRP Club
"SOP" RECEIVER
Designed by J. Everhart, N2CX
7/13/00 – n2apb
rev B